SEIKO

DIGITAL QUARTZ

Cal. A257A

PARTS LIST

Cal. A257A

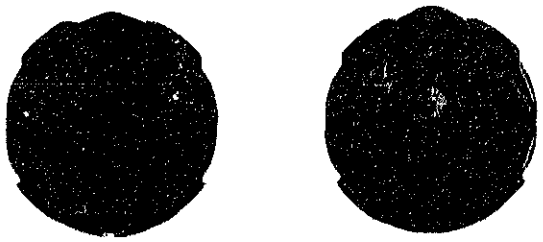


4001 237


4216 230


4216 231

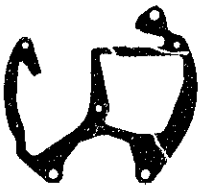
4242 230


4242 231


4242 232


☆4245 230


☆4245 231


4259 012


4270 230


4313 230


4313 231

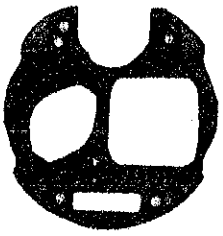
4398 092

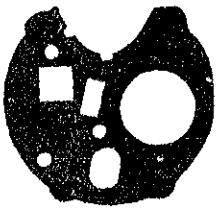
4398 106


4398 241

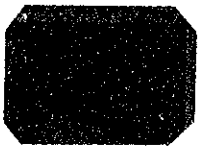
4510 471

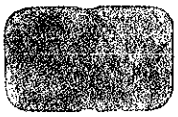
4521 230

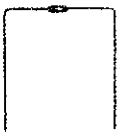
4530 230


4540 230

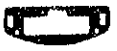
4540 231


4580 231


4991 231


☆Maxell SR926W


012 158


012 458


017 144


017 145

3/1

☆⇨Please see remarks on the next reverse page.

Cal. A257A

Characteristics

Casing diameter : ϕ 28.0 mm
Maximum height : 4.9 mm without battery
Frequency of quartz crystal oscillator : 32,768 Hz (Hz=Hertz ..... Cycles per second)
Time display : Digital Display System showing hour, minute, second, month, date and day of the week.
Alarm display : Can be set to operate at any desired hour and minute.
Stopwatch display : Digital display system showing 20-hour, minute and second (or minute, second and 1/100 second up to 20 minute measurement) on both the upper row and the lower row at the same time by simply depressing a button.
Display medium : Nematic Liquid Crystal, FE-Mode
Time signal : It can be set to ring every hour on the hour.
Regulation system : Trimmer condenser
Illuminating light : Illuminates the display in the dark by depressing the light button.

PART NO.	PART NAME	PART NO.	PART NAME
4001 237	Circuit block		
4216 230	Insulator for circuit		
4216 231	Insulator for battery		
4242 230	Plus terminal of battery connection		
4242 231	Speaker block lead terminal (A)		
4242 232	Speaker block lead terminal (B)		
☆4245 230	Switch spring (A)		
☆4245 231	Switch spring (B)		
4259 012	Anti-static electricity plate		
4270 230	Battery connection		
4313 230	Connector (A)		
4313 231	Connector (B)		
4398 092	Liquid crystal panel frame		
4398 106	Battery guard		
4398 241	Speaker block frame		
4510 471	Liquid crystal panel		
4521 230	Reflecting mirror		
4530 230	Bulb		
4540 230	Liquid crystal panel holder (A)		
4540 231	Liquid crystal panel holder (B)		
4580 231	Speaker block		
4991 231	Speaker gasket		
012 158	Screw for speaker block lead terminal (B)		
012 458	Liquid crystal panel holder screw		
017 144	Tube for liquid crystal panel holder screw (A)		
017 145	Tube for speaker block lead terminal		
☆SEIKO TR926W	Silver (II) oxide battery		
☆Maxell SR926W ☆U.C.C. 399	Silver oxide battery		

☆⇨ Please see remarks on the reverse page.
Part numbers in light letters are not shown in photos.

Cal. A257A

Remarks :

Battery

☆SEIKO TR926W
☆Maxell SR926W
☆U.C.C. 399

The applied battery for this calibre might be added the substitutive in the future.
……In that case, please refer to separate **"BATTERIES FOR SEIKO QUARTZ WATCHES."**
Note that SEIKO battery is marked with "SEIZAIKEN" on its (+) side.

Switch spring A, B

☆4245 230
☆4245 231

……The switch springs A and B are similar in shape. Be sure to make sure of them refferring to the illustration below.

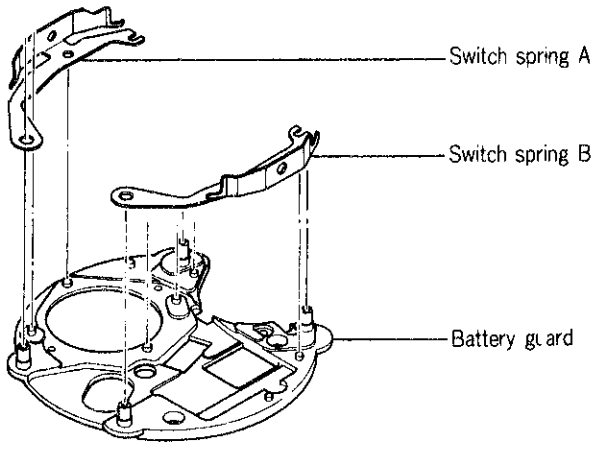

80. 5 Printed in Japan

TECHNICAL GUIDE

SEIKO

DIGITAL QUARTZ

CAL. A257A

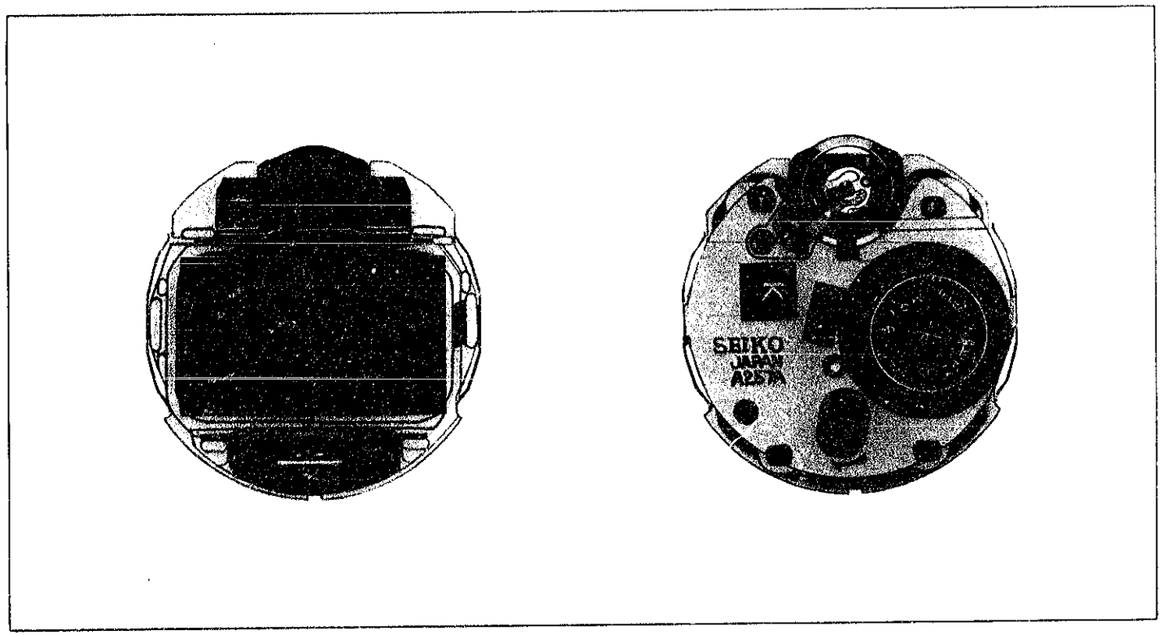

CONTENTS

I. SPECIFICATIONS

The repairing procedures of Cal. A257A are the same as those of Cal. A259A with some exceptions.
In repairing this calibre, refer to the "Technical Guide of Cal. A259A".

Item / Cal. No.	A257A
Display medium	Nematic Liquid Crystal, FEM (Field Effect Mode)
Liquid crystal driving system	Multiplex driving system
Display system	• Time and calendar function • Stopwatch function • Alarm function
Additional mechanism	• Time signal • Alarm test system • Illuminating light
Loss/gain	Loss/gain at normal temperature range Monthly rate: less than 15 seconds (Annual rate: less than 3 minutes)
Casing diameter	ϕ28.0 mm
Height	4.9 mm without battery
Regulation system	Trimmer condenser
Measuring gate	Any gate is available.
Battery	SEIKO (SEIZAIKEN) TR926W, Maxell SR926W or U.C.C. 399. Battery life is approximately 2 years. Voltage: 1.55V

II. STRUCTURE OF THE CIRCUIT BLOCK

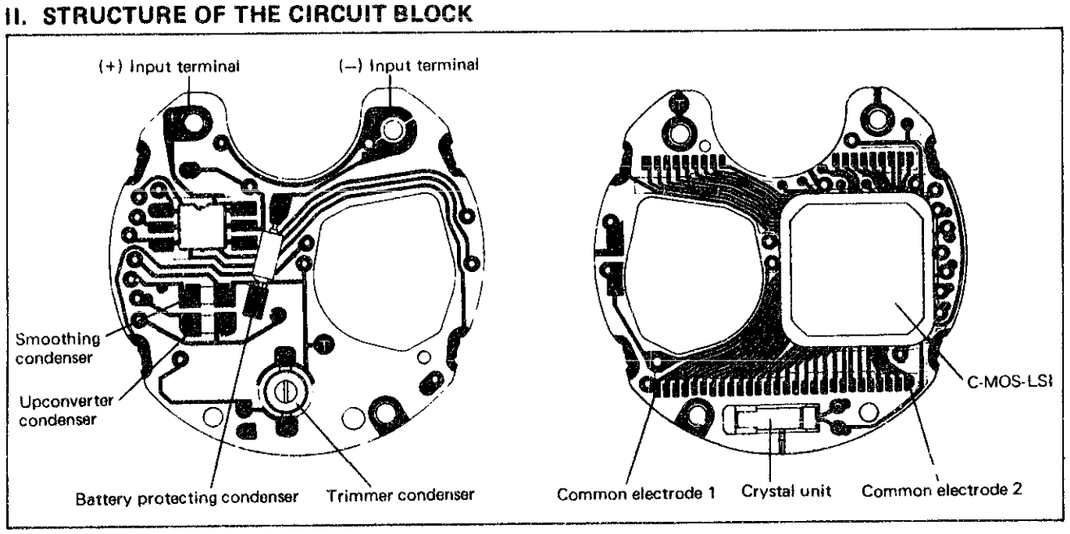

III. DISPLAY FUNCTION

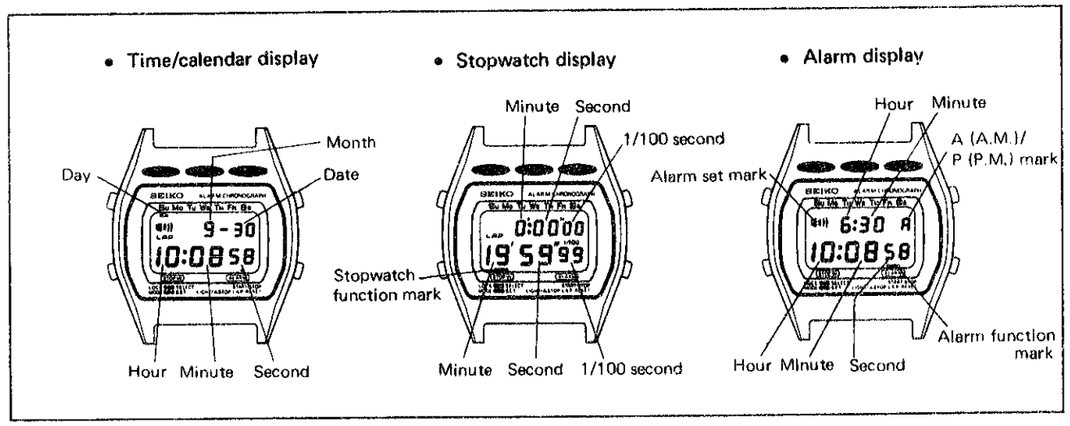

IV. DISASSEMBLING AND REASSEMBLING

- As for the disassembling and reassembling procedures, refer to the "Technical Guide of Cal. A259A".
- Difference of the disassembling and reassembling procedures between Cal. A257A and Cal. A259A are as follows.
  - Anti-static electricity plate
    Reassemble the anti-static electricity plate on the IC portion (shaded portion of the illustration on the right) of the circuit block, and then reassemble the reflecting mirror and the liquid crystal panel on the anti-static electricity plate. After fixing the liquid crystal panel holder with screws, bend the Ⓐ portion of the anti-static electricity toward the switch spring B.
  - There will be no trouble if the Ⓐ portion of the static electricity plate touches the switch spring B.

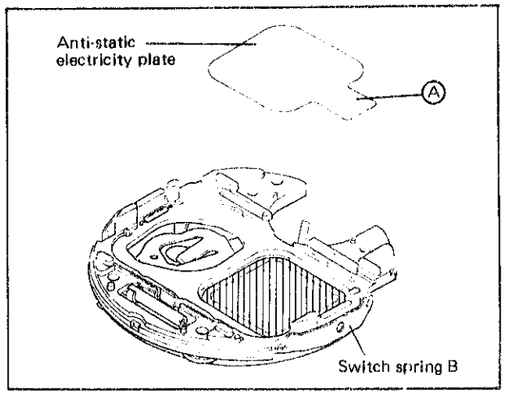

V. SEGMENT (Liquid Crystal Panel Electrode)

- Designation of segment

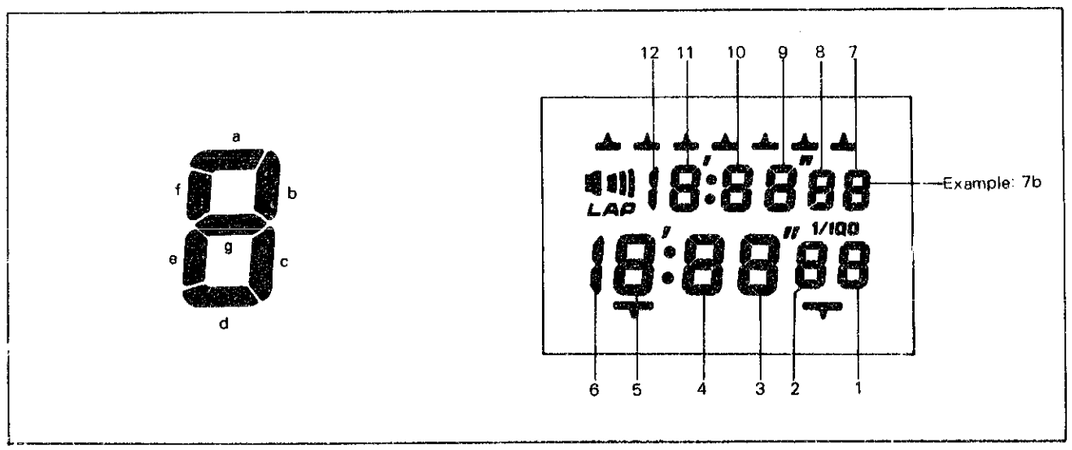

Common electrode 1 (electrically connected with ▬ segments)
Common electrode 2 (electrically connected with ▭ segments)

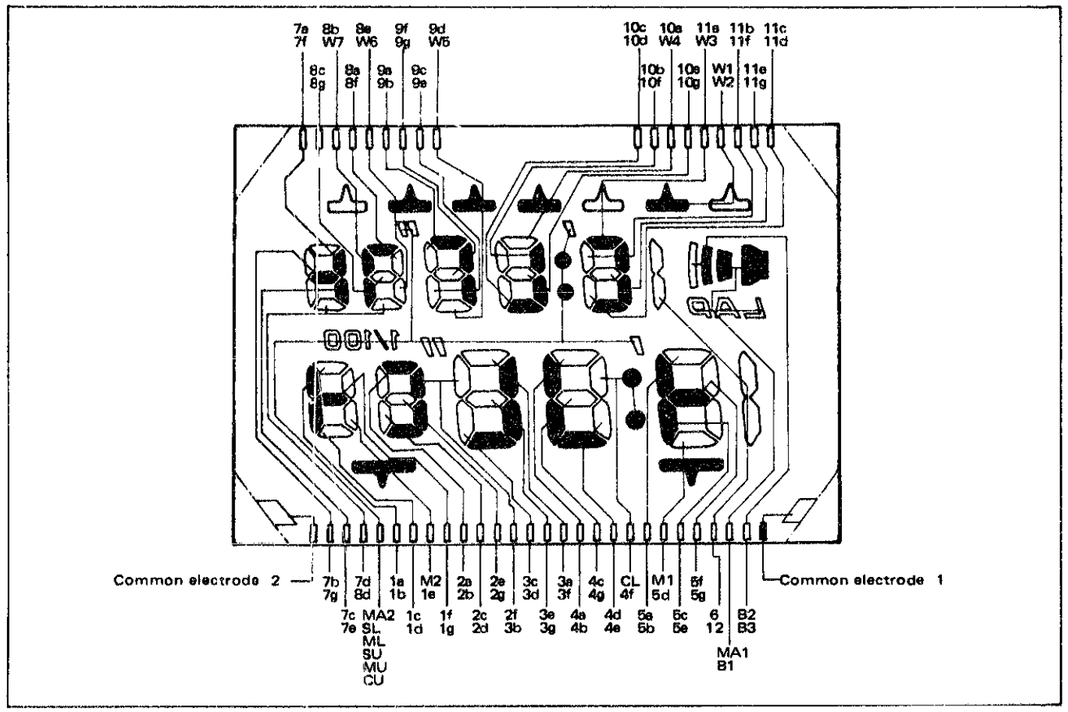

VI. CHECKING AND ADJUSTMENT

As for the checking and adjustment procedures, refer to the "Technical Guide of Cal. A259A".

Difference of the checking and adjustment procedures between Cal. A257A and Cal. A259A is as follows:

CHECK CURRENT CONSUMPTION

- When the Volt-ohm-meter is used.
  Probe Red (+): Battery connection (–)
  Probe Black (–): Battery surface (–)

Result:
Less than 3μA: Normal
More than 3μA: Defective
* Replace the liquid crystal panel or the circuit block.

* **How to check if the liquid crystal panel or the circuit block is defective when the current consumption is more than 3μA.**

- Disassemble the liquid crystal panel from the module, and measure the current consumption (with the liquid crystal panel holder screwed down).

  Less than 2.5μA — Circuit block: Normal
  Replace the liquid crystal panel.
  More than 2.5μA – Circuit block: Defective
  Replace the circuit block.

- When checking the current consumption with the module alone, be sure to check with the speaker block disassembled from the module and the speaker lead terminal and the speaker fixing spring reassembled in the module.